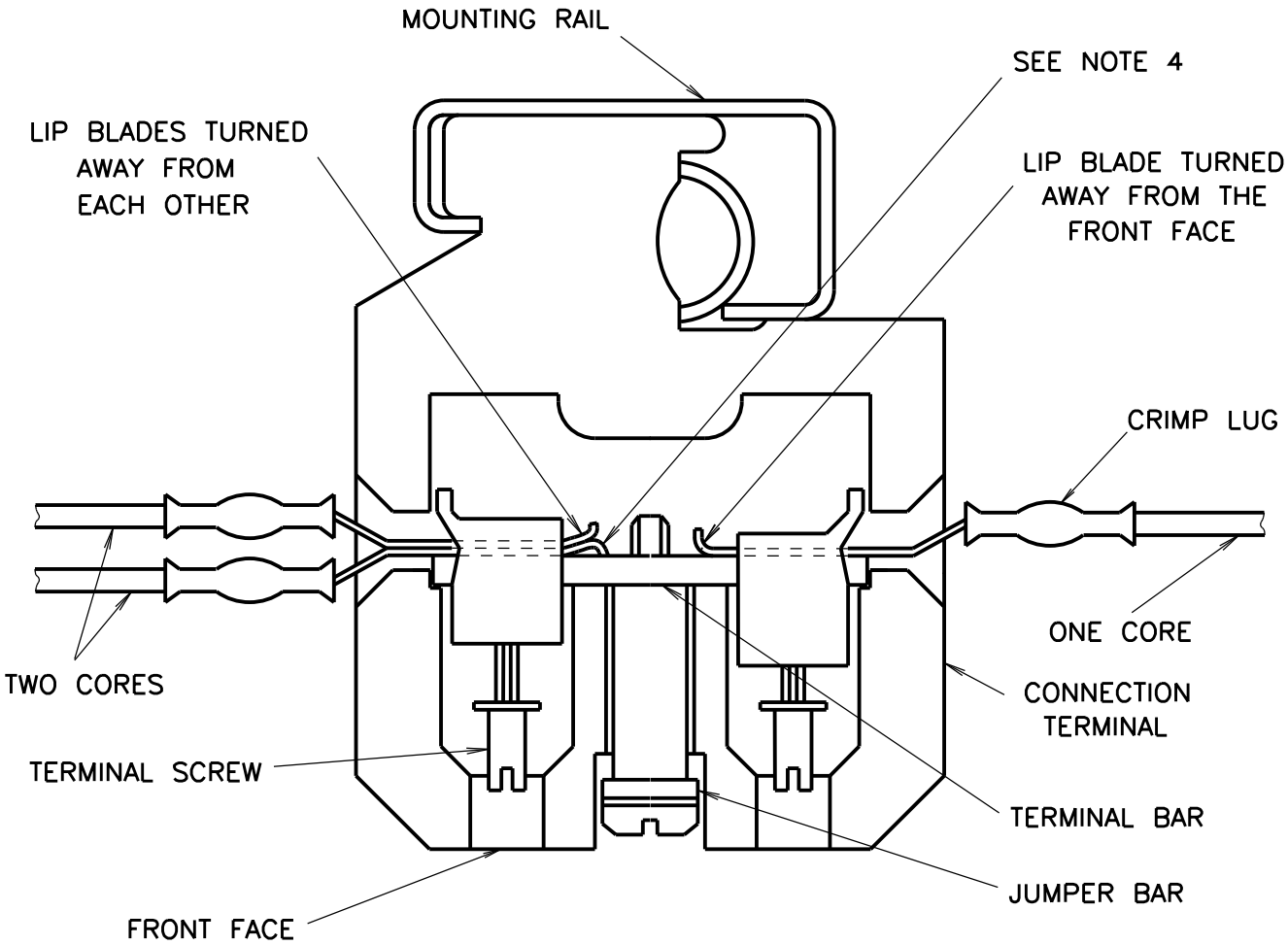

NOTES

1. FOR SINGLE CORE ENTRY, THE LIP OF THE BLADE MUST BE TURNED AWAY FROM THE FRONT FACE OF THE TERMINAL.
2. FOR TWO CORE ENTRY, THE LIPS OF THE BLADES MUST BE TURNED AWAY FROM EACH OTHER.
3. DO NOT CUT THE LIPS OFF THE CRIMP BLADES.
4. LUGS MAY BEND (AS SHOWN) IF THE TERMINAL BAR HAS NO GROOVE.

B ISSUE 7-10-97 BWT
JI TC2566 PLAN
REDRAWN. RVC

REFERENCE DRAWINGS	
TERMINAL ASSEMBLY	VM015-19

ROADS AND TRAFFIC AUTHORITY OF NSW
TRAFFIC SIGNALS

SCALE

APPROVED: 2-02-1989
F R HULSCHER
MGR STANDARDS & QUALITY

CORRECT METHOD OF INSERTING LIP BLADE CRIMP LUGS IN CONNECTION TERMINALS

SUPERSEDES: ISSUE A

DRAWN	RVC
CHECKED	BWT
PASSED	BWT 2-02-89

ISSUE B

VM417-5